PERMANENTLY INSTALLED SWIMMING POOLS
ELECTRICAL WIRING REQUIREMENTS
2014 National Electrical Code

www.NYEIA.com

PERMANENTLY INSTALLED SWIMMING POOLS ARE THOSE THAT ARE CONSTRUCTED IN THE GROUND OR PARTIALLY IN THE GROUND, AND ALL OTHERS CAPABLE OF HOLDING WATER WITH A DEPTH GREATER THAN 42 INCHES (1067 MM)

1) **Pool Pump Receptacle (Outlet) and Wiring Method**
   a. If a pump motor receptacle is located between 6' – 10' from the inside pool wall, the receptacle must be a single outlet, grounded, and Ground Fault Circuit Interrupter (GFCI) protected.
   b. Receptacle must have an extra-duty, in-use, weatherproof cover that can be closed when the cord is plugged in.
   c. The circuit line for the pump motor must be a continuous line going directly to the panel box, and is to be isolated from all other receptacles.
   d. Wire for the pump motor shall not be less than #12 AWG insulated copper grounded wire, and must be in conduit. (Exception: When entering a building the wire can change to NM) (Cannot use NM wire in conduit).
   e. Conduit
      i. PVC – All PVC conduit* must be buried at least 18" deep (12" if GFCI protected).
      ii. Metal – All Rigid Metal Conduit* must be at least 6" deep.
      * Wires used in conduit must be single strand wires (ex: THWN, etc - NO NM or UF CABLE in Conduit).

2) **Convenience Receptacle (Outlet) and Wiring Method**
   a. At least one (1) 15- or 20-ampere convenience receptacle must be located not closer than 6' but not further than 20' from the outside pool wall (Can be existing and/or wired with any approved wiring method).
   b. Convenience receptacle must be Ground Fault Circuit Interrupter (GFCI) protected, Tamper Resistant (TR), and Weather Resistant (WR) type receptacle.
   c. Must have an extra-duty, in-use, weatherproof cover that can be closed when in use (for all wet locations).
   d. Must be separate from the pool pump receptacle wiring.
   e. Wiring
      i. UF cable if buried must be at least 24" deep.
      ii. PVC – All PVC conduits* must be buried at least 18" deep (12" if GFCI protected).
      iii. Metal – All Rigid Metal Conduits* must be at least 6" deep
      * Wires used in conduit must be single strand wires (ex: THWN, etc. - NO NM or UF CABLE in Conduit).

3) **Bonding The Pool**
   a. All metal parts must be bonded together using a #8 (or larger) solid copper wire.
   b. Must use non-corrosive clamps.
   c. Conductive pool shells must be bonded in a minimum of four (4) equal points uniformly spaced around the pool
   d. Nonconductive pool shells must have a #8 (or larger) solid, bare copper wire 18"-24" from the inside pool wall under the perimeter surface 4"-6" below the final grade.
   e. A minimum of nine (9) square inches of corrosion resistant metal must be in the water to bond the water.

4) **Other**
   a. Building Permits are required. Secure a Building Permit from your municipality prior to beginning work.
   b. Pool Alarms are required. (Check with your local Building Department for additional information).
   c. Pool Pump Timers: (Check with your local Building Department for additional information).

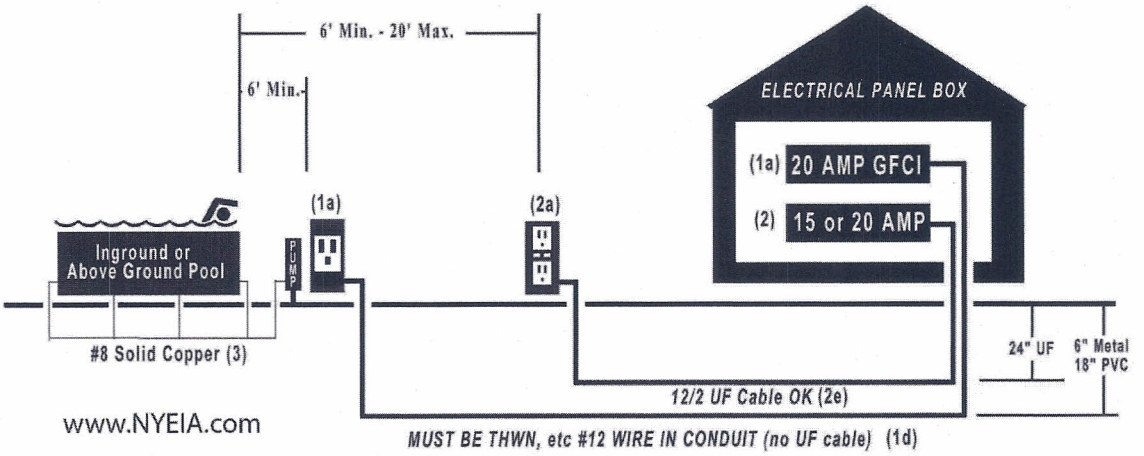

PLEASE CONTACT YOUR LOCAL INSPECTOR IF YOU HAVE ANY QUESTIONS

NEW YORK ELECTRICAL INSPECTION AGENCY
Fritz Gunther – Chief Electrical Inspector
2767 Dewey Avenue * Rochester, New York 14616 ~ (585) 436-4460 * www.*NYEIA*.com

~ 2016 ~